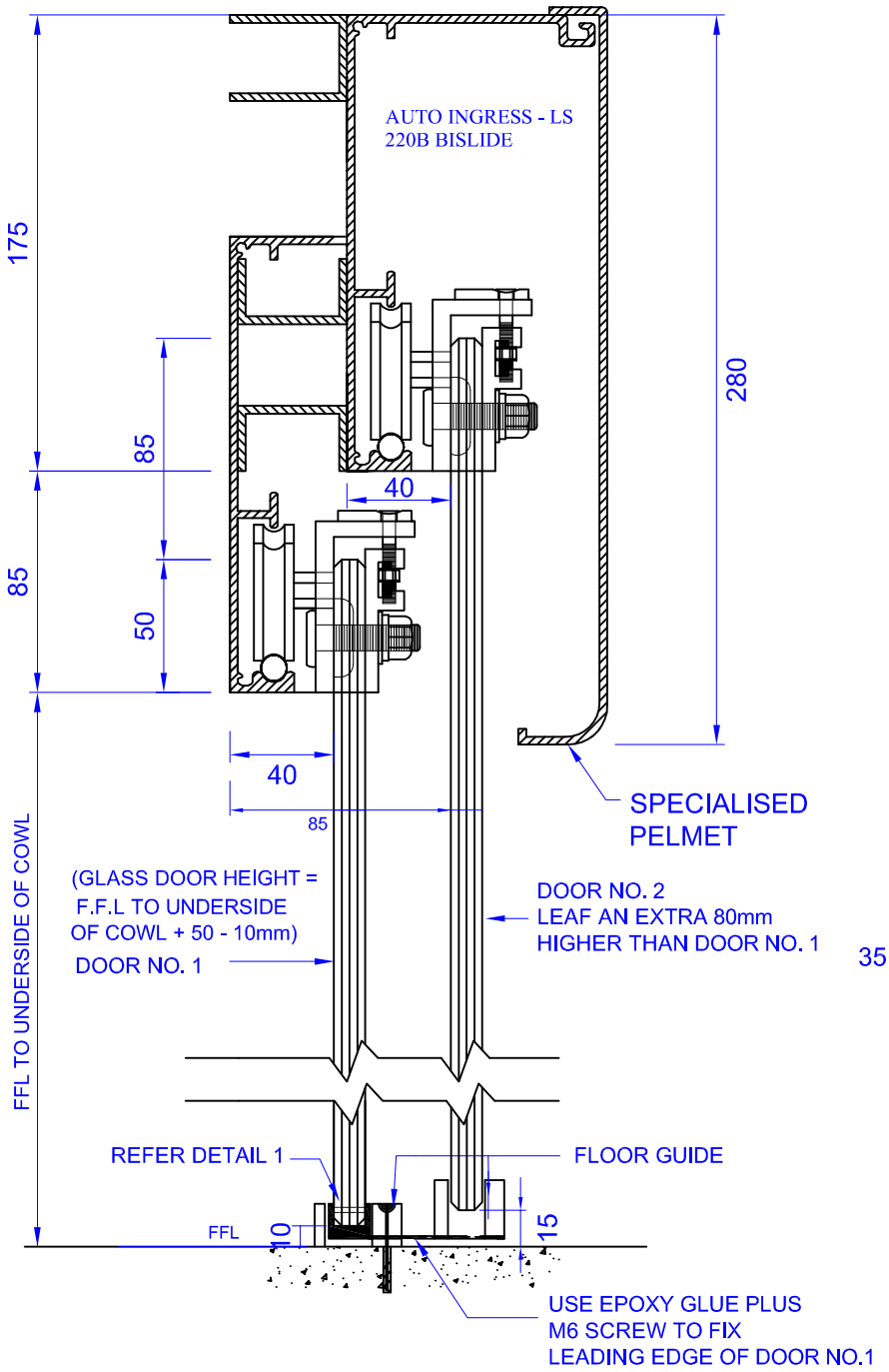

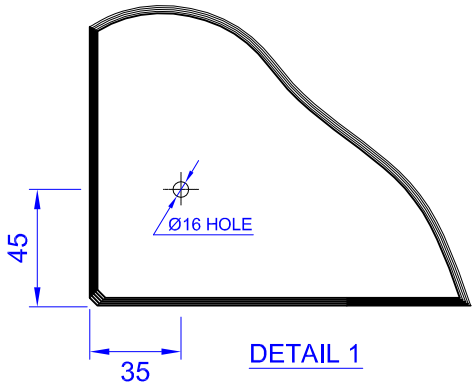

LEADING EDGE BOTTOM
CORNER OF DOOR NO.1

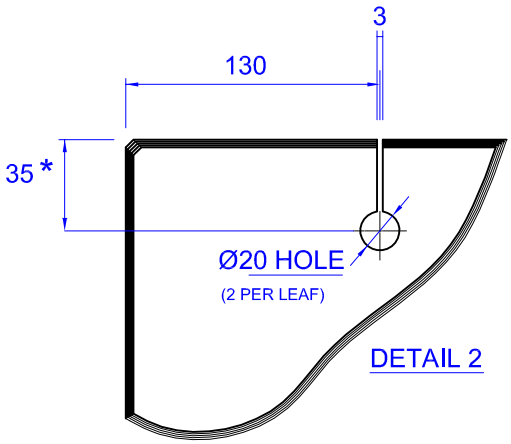

* 35 (FOR 10 -12mm GLASS)
40 (FOR 15mm GLASS)

GLASS DRILLING DETAIL

NOTES:

* Do not scale
* Unless otherwise stated all dimensions in millimeters
* FFL - Finished Floor Level (including carpets etc.)

AUTOINGRESS AUTOMATIC DOORS

SCALE 1 : 2

DATE 02/08/11

TITLE

LS220B Bi-Slide Detail
Frameless Glass Doors

DRG. NO. lsl-bs005